CEDEC Under pressure direct coupling branch tee

REFERENCE SPECIFICATIONS

Grid	Water
Highest operating pressure	16 bar
Pipe material	Steel, Asbestos cement, Ductile iron, PE and PVC-O
Pipe outer diameter	70 to 355 mm
Outlet pipe material	PE
Outlet outer diameter	25, 32, 40 and 50 mm

Applications
Tees with exclusive connection system for installing PE service branching under pressure on ductile iron and asbestos cement pipes for pressure up to 16 bar in water. These are also used with excellent results on polyethylene and PVC-O pipe networks.

Drinking water certificated
Torre saddles are equipped with EPDM joints certified for use with drinking water under WRAS: “Water Regulations Advisory Scheme” and under ACS: “Attestation de Conformité Sanitaire”.

Highest corrosion resistance
Cedec branch tees are electrically insulated preventing galvanic corrosion, consequent to its materials composition. Straps incorporate weld free manufacturing techniques to avoid inter-granular corrosion.

Spatula shut off
To carry out the under pressure connection operation, water flow is interrupted by insertion of a stainless steel spatula supplied with each Cedec equipment.

Exclusive connection system
Cedec tee system is an exclusive design that enables PE service connection pipe to be directly joined to the saddle, being fastened by means of a floating clamp, that provides highest anchoring strength with minimum assembly effort.

Convenient installation
Compact design of Torre drilling tool and strap anchoring system, both enable to install Cedec branch tees in restricted access spaces in any vertical, horizontal or inclined position.

Capping off service connections
By loosening the nut and inserting the spatula, repair work can be carried out on the service connection network or tapping can be capped off by inserting a PE plug.

Storage advantages
Saddles and straps alike are supplied in labelled boxes to make handling, storage and identification easier. Each box comes with a brochure including detailed assembly instructions along with an information sheet detailing the range of applications and the size of drilling cutter that should be used.

CEDEC Under pressure direct coupling branch tee

Technical data

CEDEC BRANCH TEES

OUTLETS, REFERENCES AND APPLICATION RANGE

ØOUT	ØP	REFERENCE	ØD min.	ØD max.	UTS. / BOX
25	24	2347 S 25 A	70	355	10
32	24	2347 S 32 A	70	355	10
40	38	2347 S 40 A	90	355	6
50	38	2347 S 50 A	90	355	6

COMPONENTS	MATERIALS
CLAMP	Brass CW617N (EN 12164)
O-RING HOLDER	Brass CW617N (EN 12164)
O-RINGS	NBR, Rubber (EN 549)
NUT	Brass CW617N (EN 12164)
BODY	Brass CW617N (EN 12164)
SADDLE	Ductile Iron GJS-450-10 + Rilsan (EN 1563)
SEAL	EPDM, Rubber (EN 681-1)

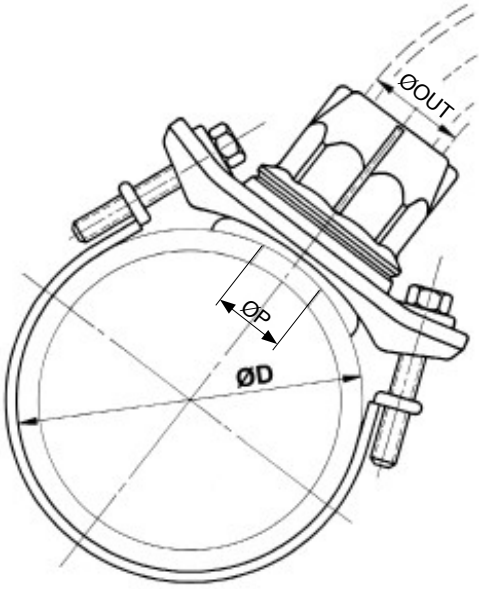

STRAPS

SIZES, REFERENCES AND APPLICATION RANGE

SIZE	REFERENCE	ØD min.	ØD max.	UTS. / BOX
60	2330 C 060	70	90	5
80	2330 C 080	90	110	5
100	2330 C 100	110	130	5
125	2330 C 125	130	150	5
150	2330 C 150	160	180	5
175	2330 C 175	190	210	5
200	2330 C 200	220	240	5
225	2330 C 225	250	270	5
250	2330 C 250	270	290	5
300	2330 C 300	315	335	5
300L	2330 C 300L	335	355	5

COMPONENTS	MATERIALS
ROTULA	Acetal Resin POM
SCREW	Stainless Steel, AISI304 (EN 10088)
STRAP	Stainless Steel, AISI304 (EN 10088)
RIM	NBR, Rubber

PE PLUGS

OUTLETS, REFERENCES AND SIZES

ØOUT	REFERENCE	Ød	H
25	2340 B 25	25	50
32	2340 B 32	32	60
40	2340 B 40	40	60
50	2340 B 50	50	70

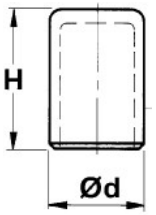

CEDEC PE Under pressure direct coupling branch tee for PE pipe

REFERENCE SPECIFICATIONS

Grid	Water
Highest operating pressure	16 bar
Pipe material	PE
Pipe outer diameter	110, 160 and 225 mm
Outlet pipe material	PE
Outlet outer diameter	25, 32, 40 and 50 mm

Applications
Tees with exclusive connection system for installing PE service branching under pressure on polyethylene pipes for pressure up to 16 bar in water.

Connection type
At the top of the electrofusion Cedec branch tees there is a connection for PE pipes. The lower part can be welded by means of electrofusion to any type of polyethylene pipe with a maximum SDR11 thickness.

Drinking water certificated
Torre saddles are equipped with EPDM joints certified for use with drinking water under WRAS: “Water Regulations Advisory Scheme” and under ACS: “Attestation de Conformité Sanitaire”.

Spatula shut off
To carry out the under pressure connection operation, water flow is interrupted by insertion of a stainless steel spatula supplied with each Cedec equipment.

Exclusive connection system
Cedec tee system is an exclusive design that enables PE service connection pipe to be directly joined to the saddle, being fastened by means of a floating clamp, that provides highest anchoring strength with minimum assembly effort.

Convenient installation
Compact design of Torre drilling tool and strap anchoring system, both enable to install Cedec branch tees in restricted access spaces in any vertical, horizontal or inclined position.

Capping off service connections
By loosening the nut and inserting the spatula, repair work can be carried out on the service connection network or tapping can be capped off by inserting a PE plug.

Storage advantages
Saddles and straps alike are supplied in labelled boxes to make handling, storage and identification easier. Each box comes with a brochure including detailed assembly instructions along with an information sheet detailing the range of applications and the size of drilling cutter that should be used.

CEDEC PE Under pressure direct coupling branch tee for PE pipe

Technical data

ELECTROFUSION CEDEC BRANCH TEES

OUTLETS, REFERENCES AND APPLICATION RANGE

ØOUT	ØD	ØP	REFERENCE	M	UTS. / BOX
25	110	23	2348 S 025/110	123	1
25	160	23	2348 S 025/160	123	1
25	225	23	2348 S 025/225	123	1
32	110	23	2348 S 032/110	123	1
32	160	23	2348 S 032/160	123	1
32	225	23	2348 S 032/225	123	1
40	110	37	2348 S 040/110	123	1
40	160	37	2348 S 040/160	123	1
40	225	37	2348 S 040/225	123	1
50	110	37	2348 S 050/110	123	1
50	160	37	2348 S 050/160	123	1
50	225	37	2348 S 050/225	123	1

COMPONENTS	MATERIALS
CLAMP	Brass CW617N (EN 12164)
O-RING HOLDER	Brass CW617N (EN 12164)
O-RINGS	NBR, Rubber (EN 549)
NUT	Brass CW617N (EN 12165)
BODY	Brass CW617N (EN 12165)
SADDLE	PE100 SDR11 (EN 1555-3)
SEAL	EPDM, Rubber (EN 681-1)
SLEEVE	Brass CW617N (EN 12164)

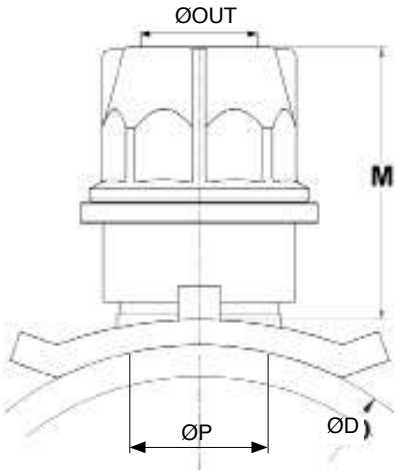

PE PLUGS

OUTLETS, REFERENCES AND SIZES

ØOUT	REFERENCE	Ød	H
25	2340 B 25	25	50
32	2340 B 32	32	60
40	2340 B 40	40	60
50	2340 B 50	50	70

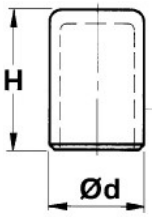

CEDEC CONNECTOR

Under pressure direct coupling connector

REFERENCE SPECIFICATIONS

Grid	Water
Highest operating pressure	16 bar
Connection thread	Male thread GAS 1” and 1½”
Outlet pipe material	PE
Outlet outer diameter	Ø25, Ø32, Ø40 and Ø50

Applications

Connection accessories to be installed on standard collars for convenient under pressure connection, for pressure up to 16 bar in water.

Drinking water certificated

Torre connectors are equipped with EPDM joints certified for use with drinking water under WRAS: “Water Regulations Advisory Scheme” and under ACS: “Attestation de Conformité Sanitaire”.

Spatula shut off

To carry out the under pressure connection operation, water flow is interrupted by insertion of a stainless steel spatula supplied with each Cedec equipment.

Exclusive connection system

Cedec connector system is an exclusive design that enables PE service connection pipe to be directly joined to the connector, being fastened by means of a floating clamp, that provides highest anchoring strength with minimum assembly effort.

Capping off service connections

By loosening the nut and inserting the spatula, repair work can be carried out on the service connection network or tapping can be capped off by inserting a PE plug.

Storage advantages

Connectors are supplied in labelled boxes to make handling, storage and identification easier. Each box comes with a brochure including detailed assembly instructions along with an information sheet detailing the range of applications and the size of drilling cutter that should be used.

CEDEC CONNECTOR

Under pressure direct coupling connector

Technical data

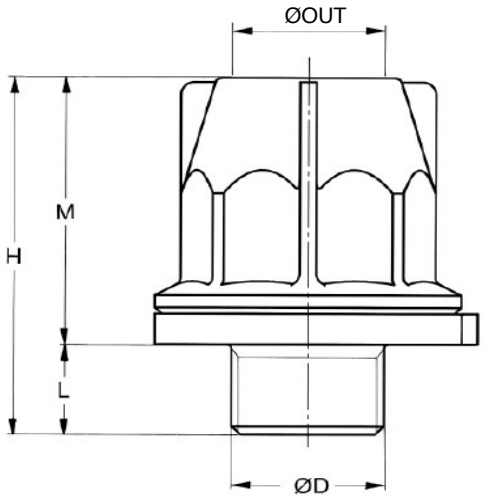

CEDEC CONNECTORS

OUTLETS, REFERENCES AND SIZES

ØOUT	REFERENCE	ØD	H	M	L
25	2347 C 25 A	1” gas	87	65	22
32	2347 C 32 A	1” gas	87	65	22
40	2347 C 40 A	1½” gas	93	69	24
50	2347 C 50 A	1½” gas	93	69	24

COMPONENTS	MATERIALS
CLAMP	Brass CW617N (EN 12164)
O-RING HOLDER	Brass CW617N (EN 12164)
O-RINGS	NBR, Rubber (EN 549)
NUT	Brass CW617N (EN 12165)
BODY	Brass CW617N (EN 12165)
SEAL	EPDM, Rubber (EN 681-1)

CEDEC EQUIPMENT Under pressure drilling kit

REFERENCE SPECIFICATIONS

Grid	Water
Drilling accessory:	Cedec branch tee
	Cedec PE branch tee
	Cedec connector
	Premium Simple and Plus branch tee

Applications

Cedec equipment is used for installation of Cedec branch tees and Cedec connectors. They include all necessary elements for drilling ductile iron, asbestos cement, polyethylene and PVC-O pipes.

Equipment box

Equipment box is made of PVC layered board, anodized aluminium edge protection and lock with key. The inside is divided into compartments for correct equipment storage.

Drilling tool

Drilling tool is completely manufactured of hardened steel. The compact design of this drilling tool makes it ideal for use in places with restricted accessibility. It comes with drain valve for emptying shavings produced along the drilling operation.

Operating of the drilling tool

Drilling tool is designed to be operated by means of a ratchet wrench, which is supplied with the equipment, or power operated by means of electric, pneumatic or hydraulic motor.

Cutter

Every equipment is supplied with drills and drill bits for ductile iron, asbestos cement, polyethylene and PVC-O pipes. All cutters incorporate the exclusive Torre octagonal shaft anchoring system. Cutters for PE and PVC-O are special “zero chips” design, collecting all shaving/chips produced by the cutting operation.

Equipment maintenance

Although these equipment do not require any special maintenance, it is advisable to clean and lubricate the drilling tool from time to time. It is also recommended to dry the equipment after each use to avoid limescale deposits, and is also advisable to carry out a check every two years in the factory.

Spare parts

All components of the Cedec equipment can be purchased separately as spare parts.

CEDEC EQUIPMENT Under pressure drilling kit

Technical data

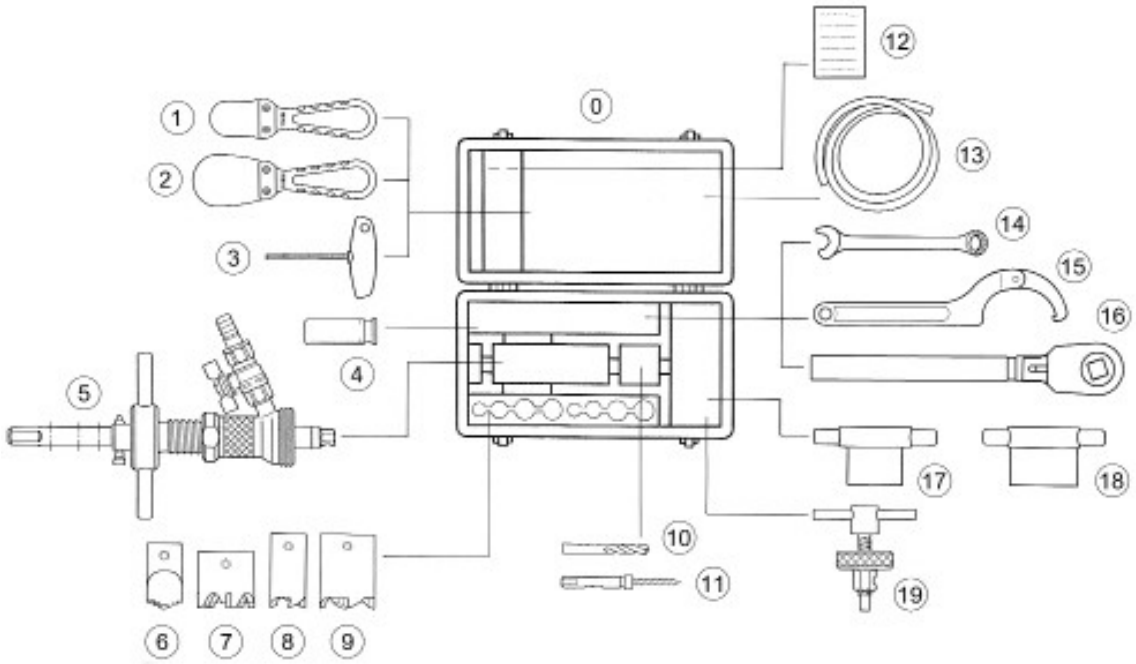

CEDEC EQUIPMENT COMPONENTS - 2112 C 03

Nº, NAME, REFERENCES AND UNITS

Nº	NAME	REFERENCE	UNT.	Nº	NAME	REFERENCE	UNT.
0	Cedec tool box	2110 C 02	1	8	1” Cutter PE/PVC (25/32)	2385 PEC 23	1
1	1" Spatula (25/32)	1256	1	9	1½” Cutter PE/PVC (40/50)	2385 PEC 37	1
2	1½" Spatula (40/50)	1258	1	10	Centering drill 6,3 mm diam.	2385 B 6	2
3	3 mm T-handle hex key	1657	1	11	Retaining screw for PVC	2385 T 4	2
4	Spare parts box:		1	12	Check list	--	1
	- Pin with elastic ring	1093	1	13	Drainage hose (2 meters)	8721	1
	- Elastic ring for pin	1108	2	14	19 Combination grip wrench	1940	1
	- O-ring (21 x 3)	JT21X3	2	15	50-80 Hook spanner	1651	1
	- Stainless steel stud bolts	--	12	16	17 mm Ratchet wrench	2481 D	1
5	Drilling tool 4 positions	1961	1	17	25/32 Coupling	1045	1
6	1” Integral drill	2385 B 24	1	18	40/50 Coupling	1044	1
7	1½” Cutter FDW	2385 FDW 38	1	19	15 Core extractor PE/PVC	1042	1

EQUIPMENT WEIGHT: 11Kg

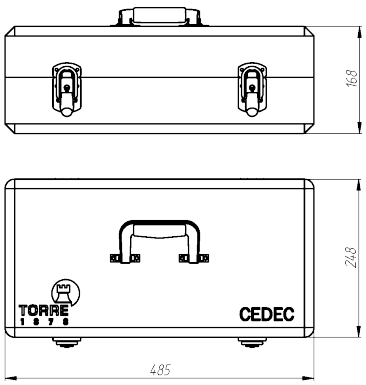

GRUPO TORRE 1878
Av. Maresme 122 · 08918 Badalona · Barcelona · Spain · T 34 933 073 160 · F 34 933 073 508 · promo@torre.biz · www.torre.biz

GOLF PLUS Under pressure threaded coupling branch tee

REFERENCE SPECIFICATIONS

Grid	Water
Highest operating pressure	16 bar
Pipe material	Steel, Asbestos cement, Ductile iron, PE and PVC-O
Pipe outer diameter	70 to 355 mm
Outlet size	Female thread GAS 1”,1¼”,1½” and 2”

Applications
Threaded coupling branch tee for under pressure branching to be installed on steel, asbestos cement and ductile iron pipes for pressure up to 16 bar in water. These are also used with excellent results on polyethylene and PVC-O pipe networks.

Drinking water certificated
Torre saddles are equipped with EPDM joints certified for use with drinking water under WRAS: “Water Regulations Advisory Scheme” and under ACS: “Attestation de Conformité Sanitaire”.

Highest corrosion resistance
The whole branch tee results electrically insulated, consequent to the component materials, thus avoiding galvanic corrosion. Straps incorporate welding free manufacturing technique to avoid inter-granular corrosion.

Spatula shut off
To carry out the under pressure connection operation the water flow is interrupted by means of inserting the stainless steel spatula supplied with the Golf equipment.

Highest tightness
Golf Plus provides highest tightness for pressurised service connections since two additional external O-rings and sleeve enhance the inner seal effectiveness for maximum safety and reliability.

Convenient installation
Compact design of Torre drilling tool and strap anchoring system, both enable to install Golf branch tees in restricted access spaces in any vertical, horizontal or inclined position.

Capping off service connections
Moving the sleeve upwards and inserting the stainless steel spatula, repair work can be carried out on the service connection network or the tapping can be capped off by means of inserting a threaded plug.

Storage advantages
Saddles and straps alike are supplied in labelled boxes to make handling, storage and identification easier. Each box comes with a brochure including detailed assembly instructions.

GOLF PLUS Under pressure threaded coupling branch tee

Technical data

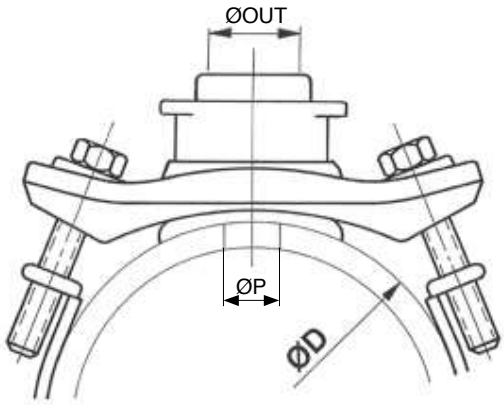

GOLF PLUS BRANCH TEES

OUTLETS, REFERENCES AND APPLICATION RANGE

ØOUT	ØP	REFERENCE	ØD min.	ØD max.	UTS. / BOX
1"	24	2355 S 2C	70	355	10
1¼"	30	2355 S 3C	70	355	10
1½"	38	2355 S 4C	90	355	6
2"	44	2355 S 5C	90	355	6

COMPONENTS	MATERIALS
O-RINGS	NBR, Rubber (EN 549)
SLEEVE	PPO + Glass Fiber (NORYL)
SADDLE	Ductile Iron GJS-450-10 +
	+ Epoxi (EN 1563)
SEAL	EPDM, Rubber (EN 681-1)

STRAPS

SIZES, REFERENCES AND APPLICATION RANGE

SIZE	REFERENCE	ØD min.	ØD max.	UTS. / BOX
60	2330 C 060	70	90	5
80	2330 C 080	90	110	5
100	2330 C 100	110	130	5
125	2330 C 125	130	150	5
150	2330 C 150	160	180	5
175	2330 C 175	190	210	5
200	2330 C 200	220	240	5
225	2330 C 225	250	270	5
250	2330 C 250	270	290	5
300	2330 C 300	315	335	5
300L	2330 C 300L	335	355	5

COMPONENTS	MATERIALS
ROTULA	Acetal Resin POM
SCREW	AISI304, Stainless Steel (EN 10088)
STRAP	AISI304, Stainless Steel (EN 10088)
RIM	NBR, Rubber

GOLF SIMPLE Threaded coupling branch tee

REFERENCE SPECIFICATIONS

Grid	Water
Highest operating pressure	16 bar
Pipe material	Steel, Asbestos cement, Ductile iron, PE and PVC-O
Pipe outer diameter	70 to 355 mm
Outlet size	Female thread GAS 1”,1¼”,1½” and 2”

Applications
Threaded coupling branch tees for branching to be installed on steel, asbestos cement and ductile iron pipes for pressure up to 16 bar in water. These are also used with excellent results on polyethylene and PVC-O pipe networks.

Drinking water certificated
Torre saddles are equipped with EPDM joints certified for use with drinking water under WRAS: “Water Regulations Advisory Scheme” and under ACS: “Attestation de Conformité Sanitaire”.

Highest corrosion resistance
The whole branch tee results electrically insulated, consequent to the component materials, thus avoiding galvanic corrosion. Straps incorporate welding free manufacturing technique to avoid inter-granular corrosion.

Convenient installation
Compact design of Torre drilling tool and strap anchoring system, both enable to install Golf branch tees in restricted access spaces in any vertical, horizontal or inclined position.

Storage advantages
Saddles and straps alike are supplied in labelled boxes to make handling, storage and identification easier. Each box comes with a brochure including detailed assembly instructions.

GOLF SIMPLE Threaded coupling branch tee

Technical data

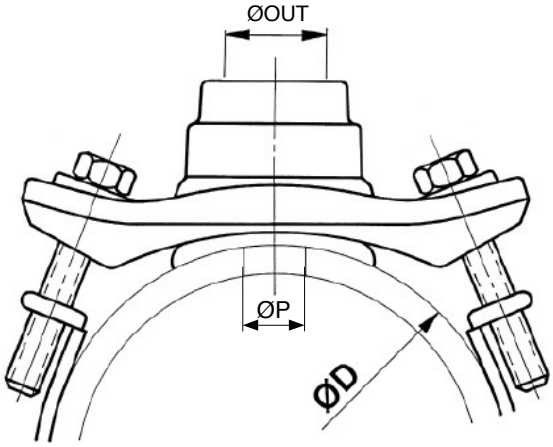

GOLF SIMPLE BRANCH TEES

OUTLETS, REFERENCES AND APPLICATION RANGE

ØOUT	ØP	REFERENCE	ØD min.	ØD max.	UTS. / BOX
1"	24	2350 S 2B	70	355	10
1¼"	30	2350 S 3B	70	355	10
1½"	38	2350 S 4B	90	355	6
2"	44	2350 S 5B	90	355	6

COMPONENTS	MATERIALS
SADDLE	Ductile Iron GJS-450-10 + + Epoxi (EN 1563)
SEAL	EPDM, Rubber (EN681-1)

STRAPS

SIZES, REFERENCES AND RANGES

SIZE	REFERENCE	ØD min.	ØD max.	UTS. / BOX
60	2330 C 060	70	90	5
80	2330 C 080	90	110	5
100	2330 C 100	110	130	5
125	2330 C 125	130	150	5
150	2330 C 150	160	180	5
175	2330 C 175	190	210	5
200	2330 C 200	220	240	5
225	2330 C 225	250	270	5
250	2330 C 250	270	290	5
300	2330 C 300	315	335	5
300L	2330 C 300L	335	355	5

COMPONENTS	MATERIALS
ROTULA	Acetal Resin POM
SCREW	AISI304, Stainless Steel (EN 10088)
STRAP	AISI304, Stainless Steel (EN 10088)
RIM	NBR, Rubber

GOLF CONNECTOR

Under pressure threaded outlet branch connector

REFERENCE SPECIFICATIONS

Grid	Water
Highest operating pressure	16 bar
Connection thread	Male thread GAS 1”, 1½” and 2”
Outlet size	Female thread GAS 1”, 1½” and 2”

Applications

Connection accessories to be installed on standard collars for convenient under pressure connection, for pressure up to 16 bar in water.

Drinking water certificated

Torre connectors are equipped with EPDM joints certified for use with drinking water under WRAS: “Water Regulations Advisory Scheme” and under ACS: “Attestation de Conformité Sanitaire”.

Spatula shut off

To carry out the under pressure connection operation, water flow is interrupted by insertion of a stainless steel spatula supplied with each Golf equipment.

Highest tightness

Golf connectors provides maximum water-tightness for pressurised service connections since two additional external o-rings and sleeve enhance the inner seal effectiveness for maximum safety and reliability.

Convenient installation

Compact design of Torre drilling tool and strap anchoring system, both enable to install Golf connectors in restricted access spaces in any vertical, horizontal or inclined position.

Storage advantages

Connectors are supplied in labelled boxes to make handling, storage and identification easier.

GOLF CONNECTOR

Under pressure threaded outlet branch connector

Technical data

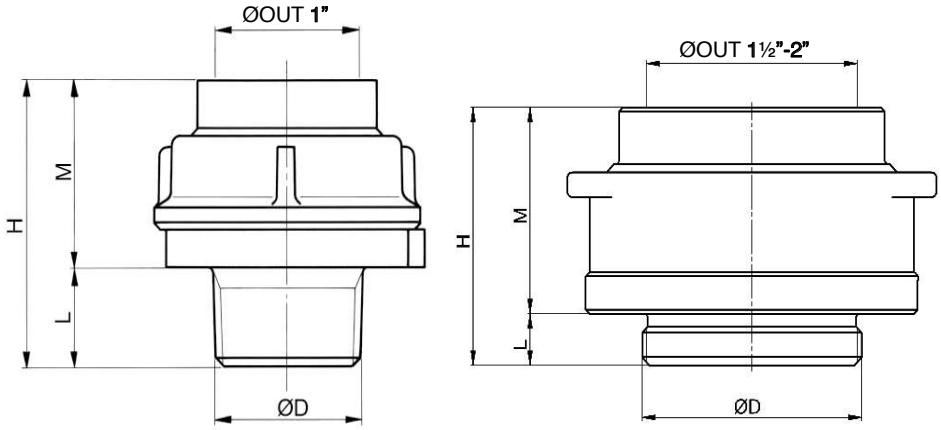

GOLF CONNECTORS

OUTLETS, REFERENCES AND SIZES

ØOUT	REFERENCE	ØD	H	M	L
1"	2350 C 2 A	1" gas	54	40	14
1½"	2350 C 4 A	1½" gas	56	42	14
2"	2350 C 5 A	2" gas	62	48	14

COMPONENTS	MATERIALS
O-RINGS	NBR, Rubber (EN 549)
NUT	Brass CW617N (EN 12165)
SLEEVE	PPO + Glass Fiber (NORYL)
BODY	Brass CW617N (EN 12165)
SEAL	EPDM, Rubber (EN 681-1)

GOLF EQUIPMENT Under pressure drilling kit

REFERENCE SPECIFICATIONS

Grid	Water
Drilling accessory:	Golf Plus branch tee
	Golf connector

Applications

Golf equipment are used install branch tees and connectors in sizes 1”, 1¼“, 1½” and 2”. They include all necessary elements for ductile iron, asbestos cement, polyethylene and PVC-O pipes.

Equipment box

Equipment box is made of PVC layered board, anodized aluminium edge protection and lock with key. The inside is divided into compartments for correct equipment storage.

Drilling tool

Drilling tool is completely manufactured of hardened steel. The compact design of this drilling tool makes it ideal for use in places with restricted accessibility. It comes with drain valve for emptying shavings produced along the drilling operation.

Operating the drilling tool

Drilling tool is designed to be operated by means of a ratchet wrench, which is supplied with the equipment, or power operated by means of electric, pneumatic or hydraulic motor.

Cutters

Every equipment is supplied with cutters and drill bits for ductile iron, asbestos cement, polyethylene and PVC-O pipes. All cutters incorporate the exclusive Torre octagonal shaft anchoring system. Cutters for PE and PVC-O are special “zero chips” design, collecting all shaving/chips produced by the cutting operation.

Equipment maintenance

Although these equipment do not require any special maintenance, it is advisable to clean and lubricate the drilling tool from time to time. It is also recommended to dry the equipment after each use to avoid limescale deposits, and is also advisable to carry out a check every two years in the factory.

Spare parts

All the components of the Golf equipment can be purchased separately as spares.

GOLF EQUIPMENT Under pressure drilling kit

Technical data

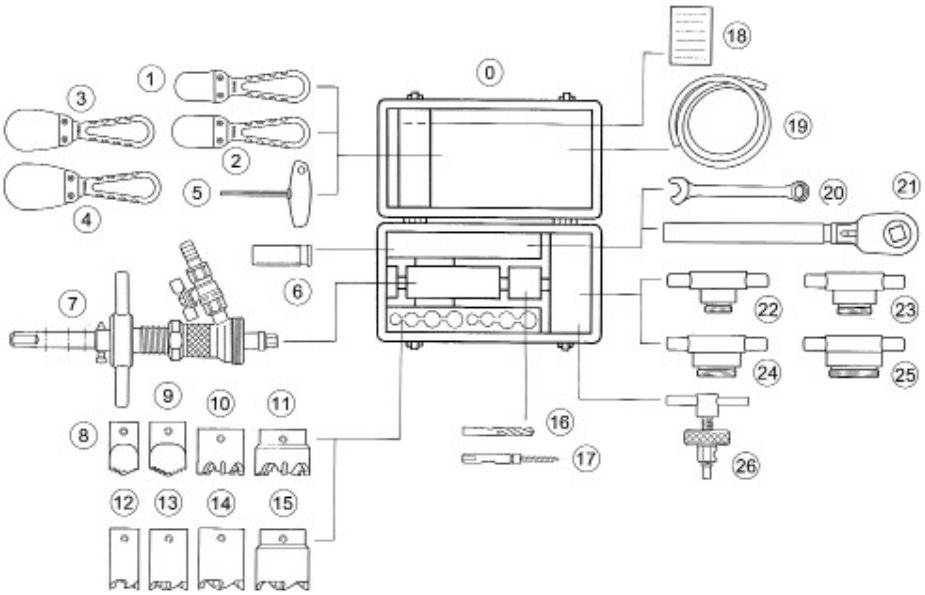

GOLF EQUIPMENT COMPONENTS - 2114 C 03

Nº, NAME, REFERENCES AND UNITS

Nº	NAME	REFERENCE	UTS.	Nº	NAME	REFERENCE	UTS.
0	Golf tool box	2110 C 02	1	12	PE/PVC 1" Cutter	2385 PEC 23	1
1	1" Spatula	1256	1	13	PE/PVC 1¼" Cutter	2385 PEC 29	1
2	1¼" Spatula	1257	1	14	PE/PVC 1½" Cutter	2385 PEC 37	1
3	1½" Spatula	1258	1	15	PE/PVC 2" Cutter	2385 PEC 43	1
4	2" Spatula	1259	1	16	Centering drill 6,3 mm diam.	2385 B 6	2
5	3 mm T-handle hex key	1657	1	17	Retaining screw for PVC	2385 T 4	2
6	Spare parts box:		1	18	Check list	--	1
	- Pin with elastic ring	1093	1	19	Drainage hose (2 meters)	8721	1
	- Elastic ring for pin	1108	2	20	19 Combination grip wrench	1940	1
	- O-ring (21 x 3)	JT21X3	2	21	17 mm Ratchet wrench	2481 D	1
	- Stainless steel stud bolts	--	12	22	1" Coupling	1936	1
7	Drilling tool 4 positions	1961	1	23	1¼" Coupling	1937	1
8	1" Integral drill	2385 B 24	1	24	1½" Coupling	1938	1
9	1¼" Integral drill	2385 B 30	1	25	2" Coupling	1939	1
10	FDW 1½" Cutter	2385 FDW 38	1	26	15 Core extractor PE/PVC	1042	1
11	FDW 2" Cutter	2385 FDW 44	1				

EQUIPMENT WEIGHT: 11,5 Kg

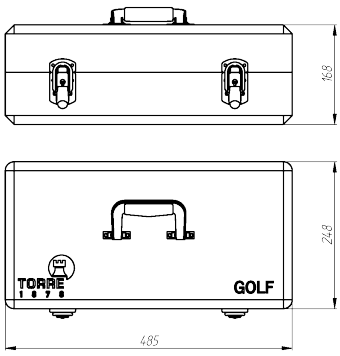

GRUPO TORRE 1878
Av. Maresme 122 · 08918 Badalona · Barcelona · Spain · T 34 933 073 160 · F 34 933 073 508 · promo@torre.biz · www.torre.biz

GIGA Under pressure flanged tee

REFERENCE SPECIFICATIONS

Grid	Water
Highest operating pressure	16 bar
Pipe material	Steel, Asbestos cement, Ductile iron
Pipe outer diameter	110 to 355 mm
Outlet size	Flange DN65, DN80 and DN100

Applications
Under pressure flanged tee for large diameter service connections and by-pass branching to be installed on steel, asbestos cement and ductile iron pipes, for pressure up to 16 bar in water.

Connection type
Giga outlet is by means of a DIN standard flanged, allowing for any standard accessory to be attached to it.

Collar components
Giga flanged tees consist of a saddle and two straps, on the lower part and a both sides flanged reel on the upper part. The appropriate saddle and straps should be selected for each deviation and pipe diameter size.

Drinking water certificated
Torre saddles are equipped with EPDM joints certified for use with drinking water under WRAS: “Water Regulations Advisory Scheme” and under ACS: “Attestation de Conformité Sanitaire”.

Highest corrosion resistance
The whole tee results electrically insulated, consequent to the component materials, thus avoiding galvanic corrosion. Straps incorporate welding free manufacturing technique to avoid inter-granular corrosion.

Slide plate shut off
To carry out the under pressure connection operation, water flow is interrupted by insertion of a stainless steel sliding plate supplied with each Giga equipment.

Convenient installation
Compact design of Torre drilling tool and strap anchoring system, both enable to install Giga flanged tees in restricted access spaces in any vertical, horizontal or inclined position.

Capping off service connections
Loosening the nuts and inserting the slide plate, repair work can be carried out on the service connection network or the tapping can be capped off by means of inserting a blind end flange.

Storage advantages
Saddles and straps alike are supplied in labelled boxes to make handling, storage and identification easier. Each box comes with a brochure including detailed assembly instructions along with information sheet detailing application range and the size of drilling cutter that should be used.

GIGA Under pressure flanged tee

Technical data

GIGA FLANGED TEES

SIZES, REFERENCES AND APPLICATION RANGE

SIZE	ØP	STRAP	REFERENCE	Ød	ØK	N	UTS. / BOX
65/1	55	100 to 200	2410 S 065/1	185	145	4	1
65/2	55	200 to 300L	2410 S 065/2	185	145	4	1
80/1	70	125 to 200	2410 S 080/1	200	160	8	1
80/2	70	200 to 300L	2410 S 080/2	200	160	8	1
100/1	90	150 to 200	2410 S 100/1	220	180	8	1
100/2	90	200 to 300L	2410 S 100/2	220	180	8	1

COMPONENTS	MATERIALS
PIN	Steel + Geomet 500 gr.B
NUT	Steel + Geomet 500 gr.B
WASHER	Steel + Geomet 500 gr.B
SCREW	Steel + Geomet 500 gr.B
SEAL SLIDE PLATE	EPDM, Rubber (EN 681-1)
SPOOL	Ductile Iron GJS-450-10 + Rilsan (EN 1563)
BASE	Ductile Iron GJS-450-10 + Rilsan (EN 1563)
SEAL PIPE	EPDM, Rubber (EN 681-1)

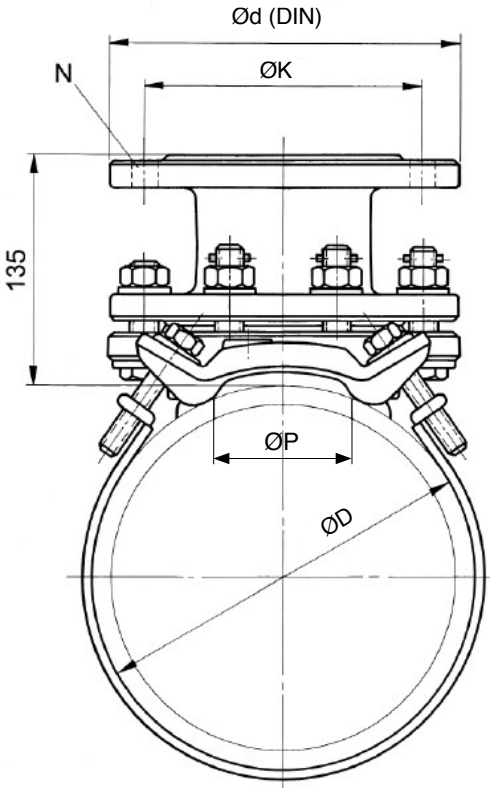

STRAPS

SIZES, REFERENCES AND APPLICATION RANGE

SIZE	REFERENCE	ØD min.	ØD max.	UTS. / BOX
100	2330 C 100	110	130	5
125	2330 C 125	130	150	5
150	2330 C 150	160	180	5
175	2330 C 175	190	210	5
200	2330 C 200	220	240	5
225	2330 C 225	250	270	5
250	2330 C 250	270	290	5
300	2330 C 300	315	335	5
300L	2330 C 300L	335	355	5

COMPONENTS	MATERIALS
ROTULA	Acetal Resin POM
SCREW	AISI304, Stainless Steel (EN 10088)
STRAP	AISI304, Stainless Steel (EN 10088)
RIM	NBR, Rubber

GIGA PE Under pressure flanged tee for PE pipe

REFERENCE SPECIFICATIONS

Grid	Water
Highest operating pressure	16 bar
Pipe material	PE
Pipe outer diameter	110 to 315 mm
Outlet size	Flange DN65, DN80 and DN100

Applications

Under pressure flanged tees for large diameter service connections and by-pass branching to be installed on PE pipes for pressure up to 16 bar in water.

Connection type

Electrofusion Giga flanged tees have an upper DIN flanged connection. Lower part is an electrofusion saddle for up to SDR11 PE pipes. The right size shall be chosen for each size of branch and mains pipes.

Drinking water certificated

Torre saddles are equipped with EPDM joints certified for use with drinking water under WRAS: “Water Regulations Advisory Scheme” and under ACS: “Attestation de Conformité Sanitaire”.

Slide plate shut off

To carry out the under pressure connection operation, water flow is interrupted by insertion of a stainless steel sliding plate supplied with each Giga equipment.

Convenient installation

Compact design of Torre drilling tool and strap anchoring system, both enable to install Giga flanged tees in restricted access spaces in any vertical, horizontal or inclined position.

Capping off service connections

Loosening the nuts and inserting the slide plate, repair work can be carried out on the service connection network or the tapping can be capped off by means of inserting a blind end flange.

Storage advantages

Saddles and straps alike are supplied in labelled boxes to make handling, storage and identification easier. Each box comes with a brochure including detailed assembly instructions along with information sheet detailing application range and the size of drilling cutter that should be used.

GIGA PE Under pressure flanged tee for PE pipe

Technical data

ELECTROFUSION GIGA FLANGED TEES

SIZES, REFERENCES AND APPLICATION RANGE

SIZE	ØP	ØD	REFERENCE	Ød	ØK	N	L	UTS. / BOX
65	58	110	2420 S 065/110	185	145	4	198	1
65	58	125	2420 S 065/125	185	145	4	198	1
65	58	160	2420 S 065/160	185	145	4	198	1
65	58	180	2420 S 065/180	185	145	4	198	1
65	58	225	2420 S 065/225	185	145	4	198	1
65	58	250	2420 S 065/250	185	145	4	198	1
65	58	315	2420 S 065/315	185	145	4	198	1
80	65	110	2420 S 080/110	200	160	8	198	1
80	65	125	2420 S 080/125	200	160	8	198	1
80	65	160	2420 S 080/160	200	160	8	198	1
80	65	180	2420 S 080/180	200	160	8	198	1
80	65	225	2420 S 080/225	200	160	8	198	1
80	65	250	2420 S 080/250	200	160	8	198	1
80	65	315	2420 S 080/315	200	160	8	198	1
100	90	160	2420 S 100/160	220	180	8	217	1
100	90	180	2420 S 100/180	220	180	8	217	1
100	90	225	2420 S 100/225	220	180	8	217	1

COMPONENTS	MATERIALS
PIN	Steel + Geomet 500 gr. B
NUT	Steel + Geomet 500 gr. B
WASHER	Steel + Geomet 500 gr. B
SCREW	Steel + Geomet 500 gr. B
SEAL SLIDE PLATE	EPDM, Rubber (EN 681-1)
SPOOL	Ductile Iron GJS-450-10 + Rilsan (EN 1563)
BASE FLANGE	Ductile Iron GJS-450-10 + Rilsan (EN 1563)
SADDLE	PE100 SDR11 (EN 1555-3)
SLEEVE	AISI 316 / Bronze Rg5 / Brass CW617N
O-RINGS	NBR, Rubber (EN 549)

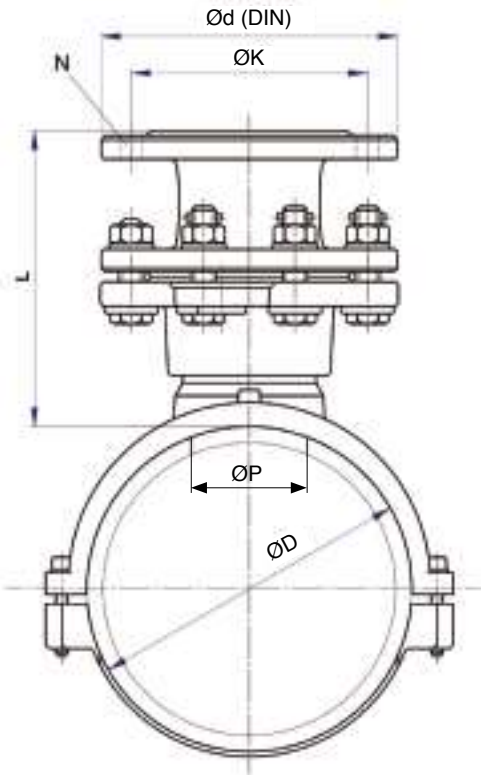

GIGA PVC-O Under pressure flanged tee for PVC-O pipe

REFERENCE SPECIFICATIONS

Grid	Water
Highest operating pressure	16 bar
Pipe material	PE and PVC-O
Pipe outer diameter	90 to 315 mm
Outlet size	Flange DN65 and DN80

Applications
Under pressure flanged tees for large diameter service connections and by-pass branching to be installed on PE and PVC-O pipes for pressure up to 16 bar in water.

Connection type
At the top of Giga PVC-O tees there is a flange, in accordance with DIN standards, to which any type of standard accessory can be coupled.

Collar components
The lower part includes a two piece collar suitable for mounting on any PE or PVC-O pipe. The specific collar size must be chosen depending on each branching size and pipe diameter.

Drinking water certificated
Torre saddles are equipped with EPDM joints certified for use with drinking water under WRAS: “Water Regulations Advisory Scheme” and under ACS: “Attestation de Conformité Sanitaire”.

Highest corrosion resistance
The whole Giga PVC-O flanged tee results electrically insulated, consequent to the component materials, thus avoiding galvanic corrosion.

Slide plate shut off
To carry out the under pressure connection operation, water flow is interrupted by insertion of a stainless steel sliding plate supplied with each Giga equipment.

Convenient installation
Compact design of Torre drilling tool and strap anchoring system, both enable to install Giga flanged tees in restricted access spaces in any vertical, horizontal or inclined position.

Capping off service connections
Loosening the nuts and inserting the slide plate, repair work can be carried out on the service connection network or the tapping can be capped off by means of inserting a blind end flange.

Storage advantages
Giga PVC-O flanged tees are supplied in labelled boxes to make handling, storage and identification easier. Each box comes with a brochure including detailed assembly instructions along with information sheet detailing the application range and the size of drilling cutter that should be used.

GIGA PVC-O Under pressure flanged tee for PVC-O pipe

Technical data

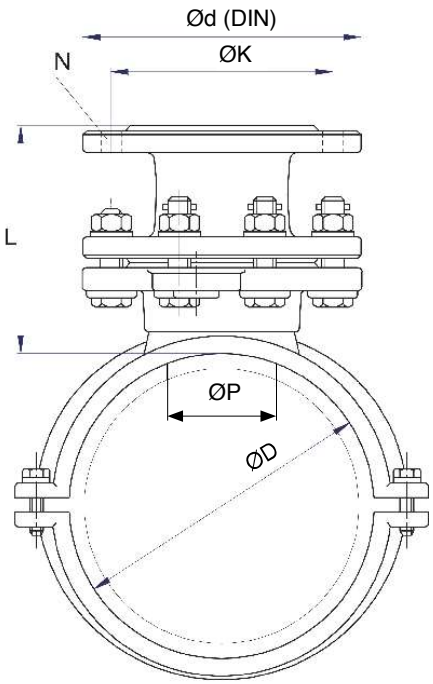

GIGA FLANGED TEES FOR PVC-O PIPE

SIZES, REFERENCES AND APPLICATION RANGE

SIZE	ØP	ØD	REFERENCE	Ød	ØK	N	L	UTS. / BOX
65	58	90	2430 S 065/090	185	145	4	167	1
65	58	110	2430 S 065/110	185	145	4	167	1
65	58	160	2430 S 065/160	185	145	4	167	1
65	58	200	2430 S 065/200	185	145	4	167	1
65	58	250	2430 S 065/250	185	145	4	167	1
65	58	315	2430 S 065/315	185	145	4	167	1
80	58	90	2430 S 080/090	200	160	8	167	1
80	65	110	2430 S 080/110	200	160	8	167	1
80	65	160	2430 S 080/160	200	160	8	167	1
80	65	200	2430 S 080/200	200	160	8	167	1
80	65	250	2430 S 080/250	200	160	8	167	1
80	65	315	2430 S 080/315	200	160	8	167	1

COMPONENTS	MATERIALS
PIN	Steel + Geomet 500 gr. B
NUT	Steel + Geomet 500 gr. B
WASHER	Steel + Geomet 500 gr. B
SCREW	Steel + Geomet 500 gr. B
SEAL SLIDE PLATE	EPDM, Rubber (EN 681-1)
SPOOL	Ductile Iron GJS-450-10 + Rilsan (EN 1563)
SADDLE FLANGE	Ductile Iron GJS-450-10 + Rilsan (EN 1563)
SADDLE	Ductile Iron GJS-450-10 + Epoxi (EN 1563)
ADAPTER	ST-52 Steel + KTL + Epoxi
SEAL PIPE	EPDM, Rubber (EN 681-1)
O-RINGS	NBR, Rubber (EN 549)

GIGA EQUIPMENT Under pressure drilling kit

REFERENCE SPECIFICATIONS

Grid	Water
Drilling accessory:	Giga flanged tee
	Giga PE flanged tee
	Giga PVC-O flanged tee

Applications

Giga equipment is used for installation of Giga 2½", 3" and 4" flanged tees. They include all necessary elements for drilling ductile iron, asbestos cement, polyethylene and PVC-O pipes.

Versions

Supplied in two versions: Standard y Complete. Standard version does not contain drilling tool or the ratchet wrench and must be used with Golf equipment or Cedec equipment. The Complete version contains all the elements needed to drill the pipe and fit the saddles.

Equipment box

Equipment box is made of PVC layered board, anodized aluminium edge protection and lock with key. The inside is divided into compartments for correct equipment storage.

Drilling tool

Drilling tool, supplied in the complete version, is manufactured completely in hardened steel. The compact design of this drilling tool makes it ideal for use in places with restricted accessibility. It comes with drain valve for emptying shavings produced along the drilling operation.

Operating the drilling tool

Drilling tool is designed to be operated by means of a ratchet wrench, which is supplied with the equipment, or power operated by means of electric, pneumatic or hydraulic motor.

Cutters

Every Giga equipment is supplied with cutters and drill bits for ductile iron, asbestos cement, polyethylene and PVC-O pipes. All cutters incorporate the exclusive Torre® octagonal shaft anchoring system. FDW cutters can be used on ductile iron pipes up to DN 300 and on asbestos cement pipes up to DN 300 Class D. PE/PVC cutters can be used on polyethylene and PVC-O pipes with up to SDR 11 and 315 mm pipe outer diameter.

Equipment maintenance

Although these kits do not require any special maintenance, it is advisable to clean and lubricate the drilling tool from time to time. It is also recommended to dry the equipment after each use to avoid limescale deposits, and is also advisable to carry out a check every two years in the factory.

Spare parts

All the components of the Giga equipment can be purchased separately as spares.

GIGA EQUIPMENT Under pressure drilling kit

Technical data

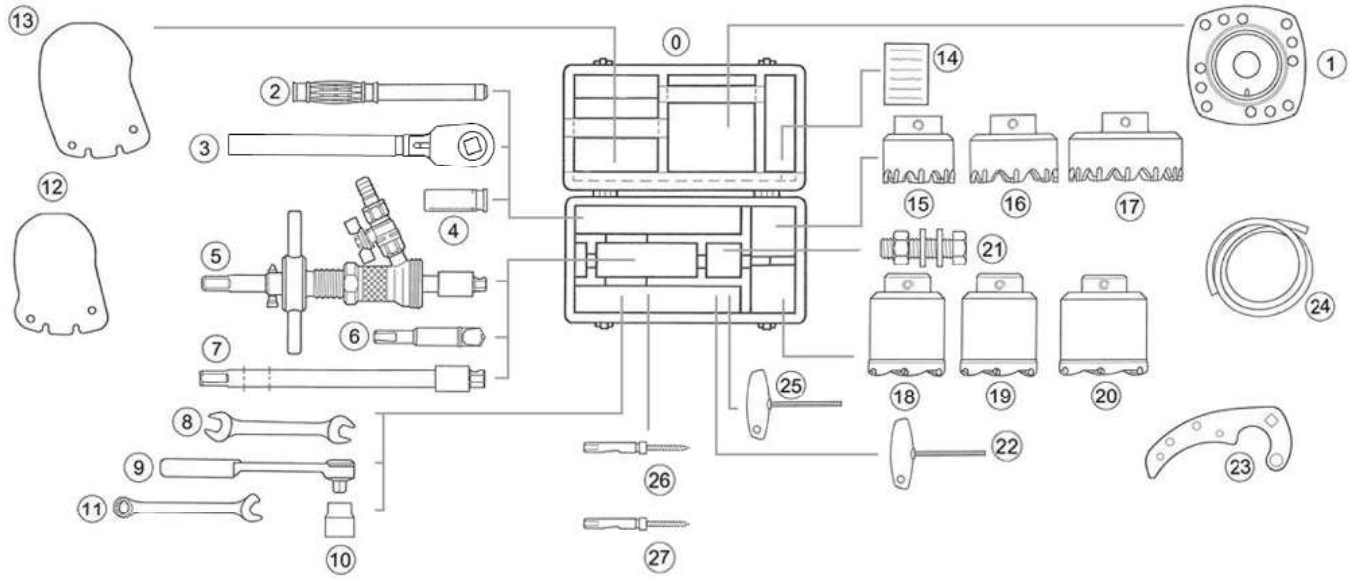

GIGA EQUIPMENT COMPONENTS - 2113 C 07 (STANDARD) 2113 C 08 (COMPLETE)

Nº, NAME, REFERENCE AND UNITS

Nº	NAME	REFERENCE	ST.	COMP.	Nº	NAME	REFERENCE	ST.	COMP.
0	Giga tool box	2111 C 02	1	1	14	Check list	--	1	1
1	Coupling flange	2480 A	1	1	15	FDW 2½" Cutter	2385 FDW 55	1	1
2	Ratchet wrench extension	2482 C	1	1	16	FDW 3" Cutter	2385 FDW 70	1	1
3	17 mm Ratchet wrench	2481 D	0	1	17	FDW 4" Cutter	2385 FDW 90	1	1
4	Spare parts box	1924/1252	1	1	18	PE 2½" Cutter	2385 PE 60	1	1
5	Drilling tool with Giga shaft	10147	0	1	19	PE 3" Cutter	2385 PE 65	1	1
6	Centering drill 14 mm diam.	2385 B 14	2	2	20	PE 4" Cutter	2385 PE 90	1	1
7	400 mm Giga shaft	2480 E 400	1	0	21	Bolts & nuts for coupling flange	--	4	4
8	24/26 Double-ended wrench	1655	1	1	22	4 mm T-handle hex key	1060	1	1
9	½" Ratchet	1821	1	1	23	Slide-plate arm	2480 B	1	1
10	24 mm Socket wrench	1822	1	1	24	Drainage hose (2 meters)	8721	0	1
11	19 Combination grip wrench	1940	0	1	25	6 mm T-handle hex key	10181	1	1
12	DN 65/80 Slide-plate	2480 H 080	1	1	26	Retaining screw for Giga PE	2385T8	1	1
13	DN 100 Slide-plate	2480 H 100	1	1	27	Retaining screw for Giga PVC-O	2385T9	1	1

EQUIPMENT WEIGHT: 17 Kg / 20 Kg

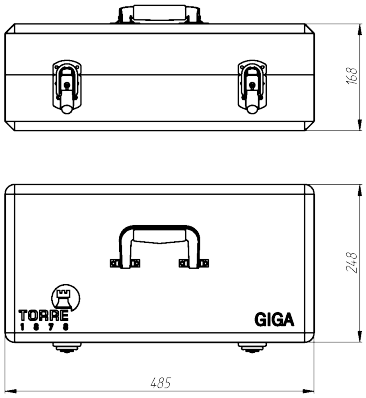

GRUPO TORRE 1878
Av. Maresme 122 · 08918 Badalona · Barcelona · Spain · T 34 933 073 160 · F 34 933 073 508 · promo@torre.biz · www.torre.biz

PREMIUM SIMPLE AND PLUS

Threaded simple and under charge branch tee

REFERENCE SPECIFICATIONS

Grid	Water
Highest operating pressure	16 bar
Pipe material	Steel, Asbestos cement, Ductile iron, PE and PVC-O
Pipe outer diameter	70 to 355 mm
Outlet size	Female thread GAS 1” and 1½”

Applications

Threaded coupling branch tees for under pressure branching to be installed on steel, asbestos cement and ductile iron pipes for pressure up to 16 bar in water. These are also used with excellent results on polyethylene and PVC-O pipe networks.

Drinking water certificated

Torre saddles are equipped with EPDM joints certified for use with drinking water under WRAS: “Water Regulations Advisory Scheme” and under ACS: “Attestation de Conformité Sanitaire”.

Highest corrosion resistance

The whole branch tee results electrically insulated, consequent to the component materials, thus avoiding galvanic corrosion. Moreover, flowing water is not in contact with cast iron body. Straps incorporate welding free manufacturing technique to avoid inter-granular corrosion.

Spatula shut off

To carry out the under pressure connection operation the water flow is interrupted by means of inserting the stainless steel spatula supplied with the Golf equipment.

Convenient installation

Compact design of Torre drilling tool, strap anchoring system and one open rotula housings enable to install Premium branch tees in restricted access in any vertical, horizontal or inclined position.

Capping off service connections

Unscrewing the locking ring and inserting the stainless steel spatula, allows repair work to be carried out on the service connection network or the tapping can be capped off by means of inserting a threaded plug.

Storage advantages

Saddles and straps alike are supplied in labelled boxes to make handling, storage and identification easier. Each box comes with a brochure including detailed assembly instructions.

PREMIUM SIMPLE AND PLUS

Threaded simple and under charge branch tee

Technical data

PREMIUM SIMPLE

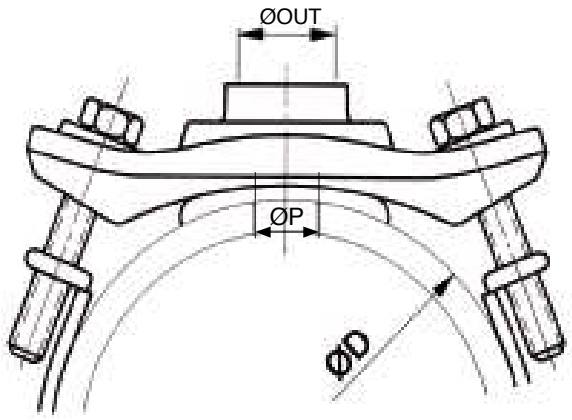

PREMIUM PLUS

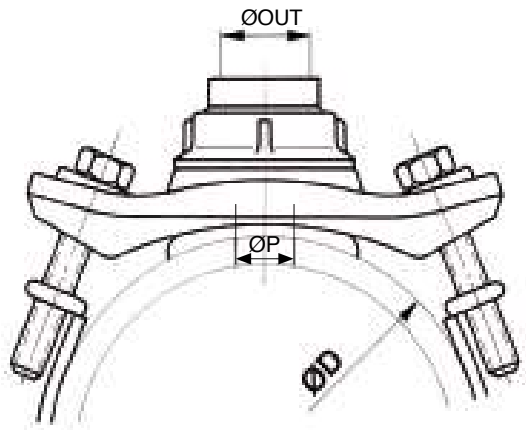

PREMIUM SIMPLE BRANCH TEES

OUTLETS, REFERENCES AND APPLICATION RANGE

ØOUT	ØP	REFERENCE	ØD min	ØD max	UTS. / BOX
1"	24	2360 S 2A	70	355	15
1½"	38	2360 S 4A	90	355	10

PREMIUM PLUS BRANCH TEES

OUTLETS, REFERENCES AND APPLICATION RANGE

ØOUT	ØP	REFERENCE	ØD min	ØD max	UTS. / BOX
1"	24	2365 S 2A	70	355	10

COMPONENTS	MATERIALS
O-RINGS	NBR, Rubber (EN 549)
NUT	Brass CW617N (EN 12165)
BODY	Brass CW617N (EN 12165)
SADDLE	Ductile Iron GJS-450-10 +
	+ Rilsan (EN 1563)
SEAL	EPDM, Rubber (EN 681-1)

STRAPS

SIZES, REFERENCES AND APPLICATION RANGE

SIZE	REFERENCE	ØD min.	ØD max.	UTS. / BOX
60	2330 C 060	70	90	5
80	2330 C 080	90	110	5
100	2330 C 100	110	130	5
125	2330 C 125	130	150	5
150	2330 C 150	160	180	5
175	2330 C 175	190	210	5
200	2330 C 200	220	240	5
225	2330 C 225	250	270	5
250	2330 C 250	270	290	5
300	2330 C 300	315	335	5
300L	2330 C 300L	335	355	5

COMPONENTS	MATERIALS
ROTULA	Acetal Resin POM
SCREW	AISI304, Stainless Steel (EN 10088)
STRAP	AISI304, Stainless Steel (EN 10088)
RIM	NBR, Rubber

STRAPS Saddle straps

Applications

These straps are used to install any of the Torre system tees:

- CEDEC branch tees
- GOLF PLUS branch tees
- GOLF SIMPLE branch tees
- GIGA flanged tees
- PREMIUM SIMPLE AND PLUS branch tees
- BTF launching tees
- CPE branch accessories

Torre straps can be installed on pipes with outer diameters from 70 up to 355 mm. A special strap is also manufactured for 63 mm diameter PE pipes.

Highest corrosion resistance

Torre straps incorporate welding free manufacturing technique to avoid inter-granular corrosion. To prevent galvanic corrosion, straps are supplied in a rubber rim to provide full isolation from the pipes.

Convenient installation

Torre straps bend smoohly around the pipe on which they are to be installed. Positioning of the screw makes it possible to install saddles easily in any position.

Storage advantages

The packaging system used for the straps makes for highly compact storage. Torre straps are supplied flat, in labelled boxes to make handling and identification easier. Each box comes with a brochure including detailed assembly instructions.

STRAPS Saddle straps

Technical data

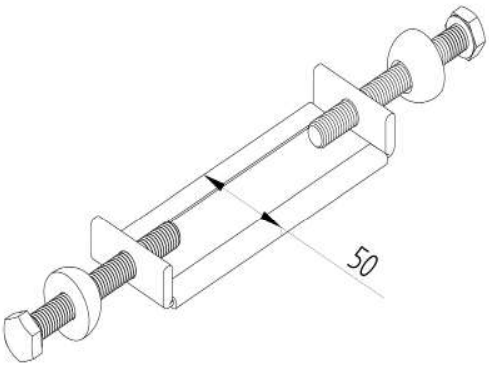

STRAPS

SIZES, REFERENCES AND APPLICATION RANGE

SIZE	REFERENCE	ØD min.	ØD max.	UTS. / BOX
60	2330 C 060	70	90	5
80	2330 C 080	90	110	5
100	2330 C 100	110	130	5
125	2330 C 125	130	150	5
150	2330 C 150	160	180	5
175	2330 C 175	190	210	5
200	2330 C 200	220	240	5
225	2330 C 225	250	270	5
250	2330 C 250	270	290	5
300	2330 C 300	315	335	5
300L	2330 C 300L	335	355	5

COMPONENTS	MATERIALS
ROTULA	Acetal Resin POM
SCREW	AISI304, Stainless Steel (EN 10088)
STRAP	AISI304, Stainless Steel (EN 10088)
RIM	NBR, Rubber

GLOBE VALVES

Description
Globe valves with body and bonnet in bronze Rg5. Bonnet threaded to the body without joint (metal seat).

Sizes
Manufactured sizes are ½, ¾, 1, 1¼, 1½ and 2 inches.

Versions and references
Different standard seat systems for each valve type:

a) Bronze disc and integrated seat:

Threaded ends: Ref. 335 D Bronze
Flanges ends: Ref. 336 D Bronze

b) Seat and disc in treated stainless steel:

Threaded ends: Ref. 335 D Inox.
Flanges ends: Ref. 336 D Inox.

c) PTFE disc and integrated seat:

Threaded ends: Ref. 335 D T
Flanges ends: Ref. 336 D T

Applications
To regulate the flow of a wide variety of fluids: water, air, steam, petroleum derivatives, etc., for pressure up to 30 bar.

Manufactured upon request
These valves are only manufactured in limited series and upon request.

GLOBE VALVES

Technical data

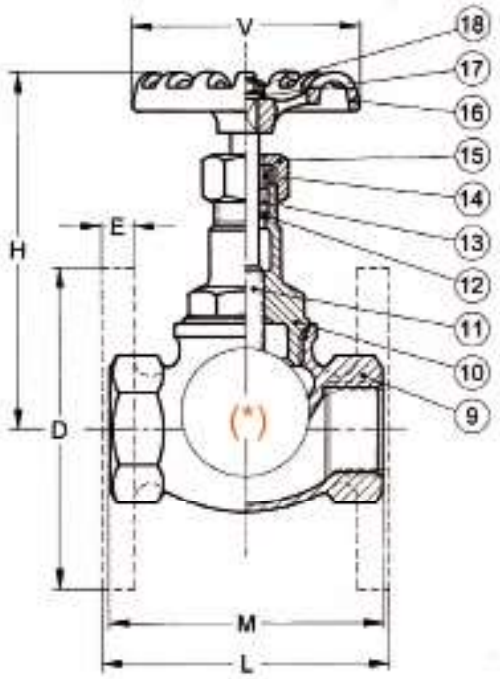

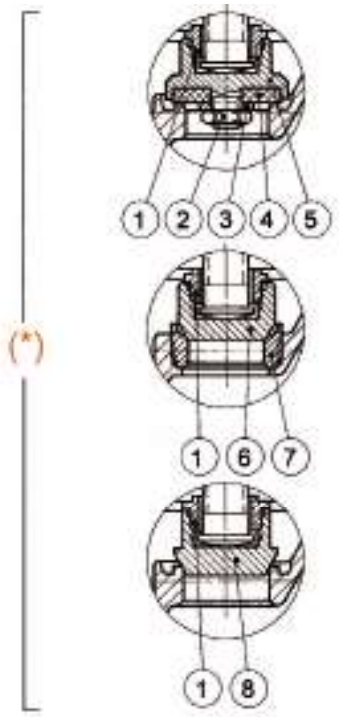

GLOBE VALVES

COMPONENTS AND MATERIALS

Nº	COMPONENTS	MATERIALS
1	LOCK NUT	Rg5, Bronze
2	DISC NUT	Brass CW614N (EN 12164)
3	DISC WASHER	Brass CW614N (EN 12164)
4	DISC	PTFE
5	DISC HOLDER	Brass CW614N (EN 12164)
6	STAINLESS STEEL VALVE	AISI431, Treated Stainless Steel
7	STAINLESS STEEL SEAT	AISI431, Treated Stainless Steel
8	BRONZE VALVE	Rg5, Bronze
9	BODY	Rg5, Bronze
10	BONNET	Rg5, Bronze
11	STEM (from ½" to 1")	AISI303, Stainless Steel
11	STEM (from 1¼" to 2")	Rg5, Bronze
12	PACKING WASHER	Rg5, Bronze
13	PACKING	Pure PTFE
14	GLAND	Rg5, Bronze
15	PACKING NUT	Rg5, Bronze
16	HANDWHEEL	Aluminium
17	HANDWHEEL WASHER	Brass CW614N (EN 12164)
18	HANDWHEEL NUT	Brass CW614N (EN 12164)

THREADED VALVES - REF.335 D

SIZES, RANGES AND WEIGHTS

SIZE	H open	H closed	M	V	Kg
½"	111	105	67	60	0,600
¾"	123	113	80	60	0,860
1"	141	130	95	80	1,300
1¼"	160	149	112	100	2,080
1½"	163	149	132	100	2,860
2"	206	184	160	120	4,650

FLANGED VALVES - REF.336

SIZES, RANGES AND WEIGHTS

SIZE	D-DIN	E	H open	H closed	M	V	Kg
DN 15	95	10	111	105	80	60	1,580
DN 20	105	11	123	113	90	60	2,180
DN 25	115	11	141	130	100	80	2,930
DN 32	140	13	160	149	110	100	4,810
DN 40	150	13	163	149	130	100	5,760
DN 50	165	15	206	184	150	120	8,740

GLOBE VALVES with secured bonnet

Description

Globe valves with body and bonnet in bronze Rg5. Bonnet threaded to the body without joint and with safety nut against vibrations.

Sizes

Manufactured sizes are ½, ¾, 1, 1¼, 1½ and 2 inches.

Versions and references

Different standard seat systems for each valve type:

a) Bronze disc and integrated seat:

Threaded ends: Ref. 335 D Bronze
Flanged ends: Ref. 336 D Bronze

b) Seat and disc in treated stainless steel:

Threaded ends: Ref. 335 SB SS
Flanged ends: Ref. 336 SB SS

c) PTFE disc and integrated seat:

Threaded ends: Ref. 335 SB T
Flanged ends: Ref. 336 SB T

Applications

Designed for use in installations subject to vibrations, specifically in the shipbuilding industry. These valves are used to regulate flow of a wide variety of fluids: water, air, steam, petroleum derivatives, etc., for pressure up to 30 bar.

Manufactured upon request

These valves are only manufactured in limited series and upon request.

GLOBE VALVES with secured bonnet

Technical data

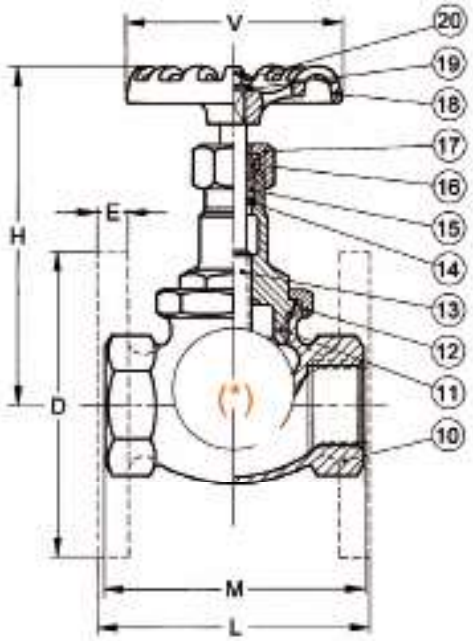

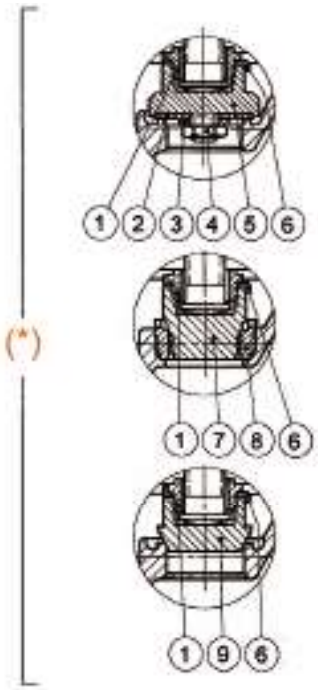

"SB" GLOBE VALVES

COMPONENTS AND MATERIALS

Nº	COMPONENTS	MATERIALS
1	LOCK NUT	Rg5, Bronze
2	DISC	PTFE with Graphite Charge
3	DISC WASHER	Rg5, Bronze
4	DISC NUT	Rg5, Bronze
5	DISC HOLDER	Rg5, Bronze
6	LOCKING WASHER	Copper
7	STAINLESS STEEL VALVE	AISI431, Treated Stainless Steel
8	STAINLESS STEEL SEAT	AISI431, Treated Stainless Steel
9	BRONZE VALVE	Rg5, Bronze
10	BODY	Rg5, Bronze
11	BONNET	Rg5, Bronze
12	SECURITY NUT	Rg5, Bronze
13	STEM (from ½" to 1")	AISI303, Treated Stainless Steel
13	STEM (from 1¼" to 2")	Rg5, Bronze
14	PACKING WASHER	Rg5, Bronze
15	PACKING	Pure PTFE
16	GLAND	Rg5, Bronze
17	PACKING NUT	Rg5, Bronze
18	HANDWHEEL	Aluminium
19	HANDWHEEL WASHER	Brass CW614N (EN 12164)
20	HANDWHEEL NUT	Brass CW614N (EN 12164)

THREADED VALVES - REF.335 SB

SIZES, RANGES AND WEIGHTS

SIZE	H open	H closed	M	V	Kg
½"	111	105	67	60	0,600
¾"	123	113	80	60	0,860
1"	141	130	95	80	1,300
1¼"	160	149	112	100	2,080
1½"	163	149	132	100	2,860
2"	206	184	160	120	4,650

FLANGED VALVES - REF.336 SB

SIZES, RANGES AND WEIGHTS

SIZE	D-DIN	E	H open	H closed	M	V	Kg
DN 15	95	10	111	105	80	60	1,580
DN 20	105	11	123	113	90	60	2,180
DN 25	115	11	141	130	100	80	2,930
DN 32	140	13	160	149	110	100	4,810
DN 40	150	13	163	149	130	100	5,760
DN 50	165	15	206	184	150	120	8,740

MOTORIZED EQUIPMENT Drive

Applications

Electrical hand tool compatible with Torre drilling tool enabling quick and safe perforations.

Design

Ergonomic and compact, fitted with non-slipping handle. Dust tight. Gravity centre enabling any position. Body design enabling to perform operation in tight packed spaces. Drive head high grade cast aluminium and GRP body/handle. Long life and low maintenance.

Advantages

- Can be used with 230V, 50 Hz with double insulation according to VDE / CEE standards. Drill speed 32 rpm.
- High performance with minimum energy consumption.
- Direct access brushes without needing to open the motor. Safety switch.

Standards

Motorized equipment is supported by numerous quality certifications and approvals in different countries.

- The European Council Machine Directive 98/37/EC
- The European Council Low Voltage Directive 2006/95/EEC
- The European Council Electromagnetic Compatibility Directive 89/336/EEC.

MOTORIZED EQUIPMENT Drive

Technical data

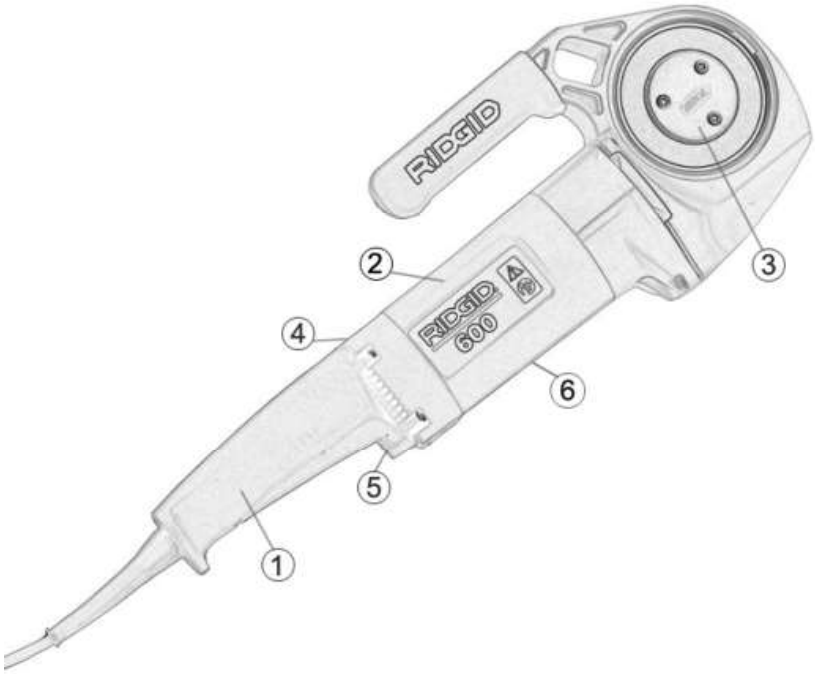

MOTORIZED EQUIPMENT

COMPONENTS

Nº	COMPONENTS
1	Motor
2	Gear case
3	Shaft housing
4	Reverse toggle
5	Power button
6	Machine identification label

TECHNICAL CHARACTERISTICS

DRILL SPEED	32 rpm
ELECTRICAL CURRENT	230 V - 50 Hz
POWER	1020W
WEIGHT	6 Kg
SIZE	520 x 200 x 100 mm
NOISE LEVEL	85dBA